Work Order ID 71655

Thursday, July 07, 2011 12:06:47 PM

Item ID: D3256-3 **Accept** **Setup Start** **Stop**

Revision ID:

Item Name: Gasket

Start Date: 7/7/2011 **Start Qty:** 6.00 **Cust Item ID:**

Required Date: 7/21/2011 **Req'd Qty:** 6.00 **Customer:**

Reference:

Approvals: **Process Plan:** CL **Date:** 11/07/07 **Tooling:** _____ **Date:** _____ **Run Start** **Stop**

QC: _____ **Date:** _____ **SPC (Y/N):** _____ **Date:** _____

Draw Nbr	Revision Nbr
D3256	Rev C

Sequence ID/ Work Center ID	Operation Description	Set Up/ Run Hours	Tool ID	Tool #	Plan Code	Accept Qty	Reject Qty	Reject Number	Insp. Stamp
100 Waterjet FLOW CNC Waterjet	FLOW WATER JET Memo: 1-Cut as per Dwg D3256 ☐Dwg Rev: C ☐Prog Rev: C ☐2-Deburr if necessary	0.00 0.00		11/08/11		10			
110 QC Quality Control	QC2- Inspect parts off machine FAI/FAIB Memo	0.00 0.00		11/08/11		10			
120 QC Quality Control	QC8- Inspect parts - second check Memo	0.00 0.00		8 11/08/12		+10			

Dart Aerospace Ltd

W/O:		WORK ORDER CHANGES					
DATE	STEP	PROCEDURE CHANGE	By	Date	Qty	Approval Chief Eng / Prod Mgr	Approval QC Inspector

Part No: _____ **PAR #:** _____ **Fault Category:** _____ **NCR:** Yes No **DQA:** _____ **Date:** _____

Resolution: _____ **Disposition:** _____ **QA: N/C Closed:** _____ **Date:** _____

NCR:		WORK ORDER NON-CONFORMANCE (NCR)						
DATE	STEP	Description of NC Section A	Corrective Action Section B			Verification Section C	Approval Chief Eng	Approval QC Inspector
			Initial Chief Eng	Action Description Chief Eng	Sign & Date			

NOTE: Date & initial all entries

H:\fFORMS\Quality Assurance\approved QA\NCRWO RevE

Work Order ID 71655

Thursday, July 07, 2011 12:06:47 PM

Item ID: D3256-3 **Accept** **Setup Start**

Revision ID: **Stop**

Item Name: Gasket

Start Date: 7/7/2011 **Start Qty:** 6.00 **Cust Item ID:**

Required Date: 7/21/2011 **Req'd Qty:** 6.00 **Customer:**

Reference:

Run Start

Approvals: **Process Plan:** _____ **Date:** _____ **Tooling:** _____ **Date:** _____

Stop

QC: _____ **Date:** _____ **SPC (Y/N):** _____ **Date:** _____

Sequence ID/ Work Center ID	Operation Description	Set Up/ Run Hours	Tool ID	Tool #	Plan Code	Accept Qty	Reject Qty	Reject Number	Insp. Stamp
130	Identify as per dwg & Stock Location: 176	0.00					11/8/15	102	
Packaging	**Memo**	0.00							
Packaging									
140	QC21- Final Inspection - Work Order Release	0.00					11/8/15		
QC	**Memo**	0.00							
Quality Control									

MK 11-08-15

Dart Aerospace Ltd

W/O:		WORK ORDER CHANGES					
DATE	STEP	PROCEDURE CHANGE	By	Date	Qty	Approval Chief Eng / Prod Mgr	Approval QC Inspector

Part No: _____ **PAR #:** _____ **Fault Category:** _____ **NCR:** Yes No **DQA:** _____ **Date:** _____

Resolution: _____ **Disposition:** _____ **QA: N/C Closed:** _____ **Date:** _____

NCR:		WORK ORDER NON-CONFORMANCE (NCR)						
DATE	STEP	Description of NC Section A	Corrective Action Section B			Verification Section C	Approval Chief Eng	Approval QC Inspector
			Initial Chief Eng	Action Description Chief Eng	Sign & Date			

NOTE: Date & initial all entries

H:\fFORMS\Quality Assurance\approved QA\NCRWO RevE

Picklist Print

Thursday, July 07, 2011 12:06:44 PM

Work Order ID: 71655

Parent Item: D3256-3

Parent Item Name: Gasket

Start Date: 7/7/2011 **Required Date:** 7/21/2011

Start Qty: 6.00 **Required Qty:** 6.00

Comments: IPP □ B□04.12.06□Made in-house□KJ/JLM□
IPP Rev:C ecn 1052/water jet 07-11-05 DD verified by:EC

Component Item ID/ Item Name	Replacement Item ID	Mfg/ Purch	Bin Item	Primary Location	Last Location	Route Seq ID	Unit of Measure	Qty on Hand	Qty per Kit	Total Qty	Qty Issued	Date Issued	Status
D3245 Gasket		Manufactured	No			100	Each	0.0000	1.02	6.442105			

B69232 11/08/11 8.0

Dart Aerospace Ltd

W/O:		WORK ORDER CHANGES					
DATE	STEP	PROCEDURE CHANGE	By	Date	Qty	Approval Chief Eng / Prod Mgr	Approval QC Inspector

Part No: _____ **PAR #:** _____ **Fault Category:** _____ **NCR:** Yes No **DQA:** _____ **Date:** _____

Resolution: _____ **Disposition:** _____ **QA: N/C Closed:** _____ **Date:** _____

NCR:		WORK ORDER NON-CONFORMANCE (NCR)						
DATE	STEP	Description of NC Section A	Corrective Action Section B			Verification Section C	Approval Chief Eng	Approval QC Inspector
			Initial Chief Eng	Action Description Chief Eng	Sign & Date			

NOTE: Date & initial all entries

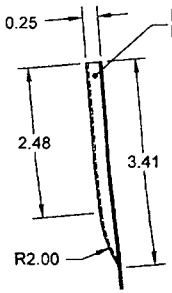

DETAIL A
SCALE 1 : 2

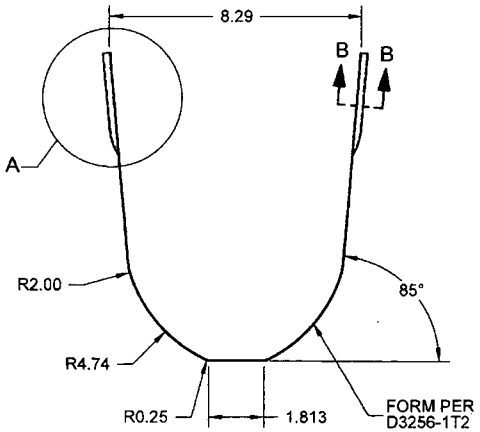

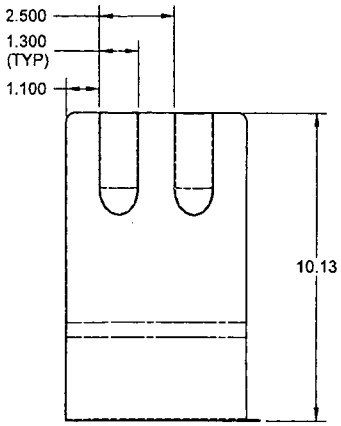

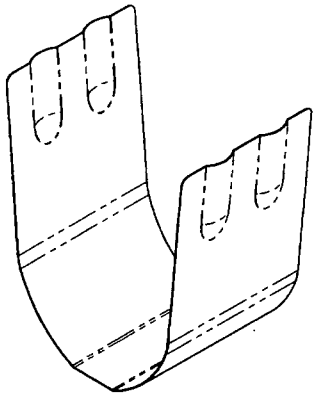

D3256-1 ACCESS PANEL
(MAKE FROM D3256-1F)

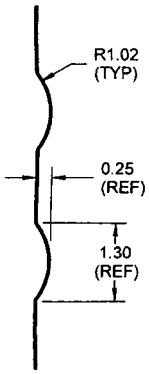

SECTION B-B
SCALE 1 : 2
(VIEW ROTATED)

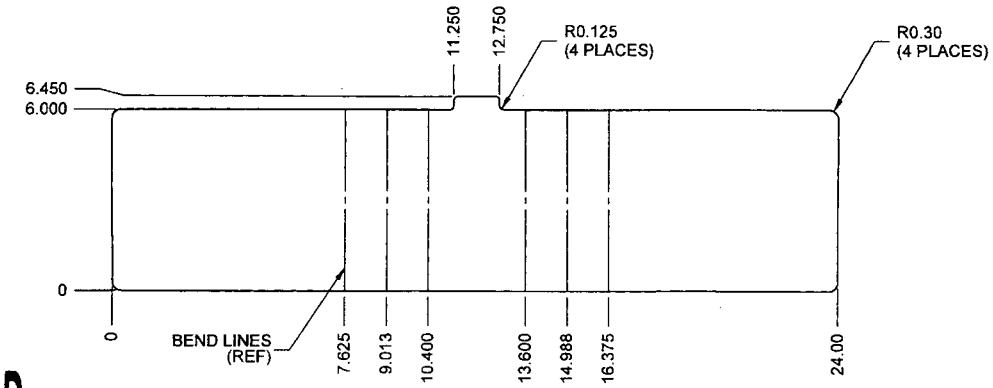

D3256-1F FLAT PATTERN 1

RELEASED
07.10.23

SHOP COPY
RETURN TO
ENGINEERING
UNCONTROLLED COPY
SUBJECT TO AMENDMENT
WITHOUT NOTICE
WORK ORDER
NO. 71655
CZ 11/07/07

NOTES:
1) MATERIAL: AISI 304/316 STAINLESS STEEL SHEET (0.032 THICK, REF)
PER MIL-S-5019 (ANNEALED) 2B FINISH
(REF. DART SPEC. M304S22GA)
2) FINISH: NONE
3) TOLERANCES: PER DART QSI 018 UNLESS OTHERWISE NOTED
4) UNITS: INCHES UNLESS OTHERWISE NOTED
5) BREAK SHARP EDGES: 0.005 TO 0.010 MAX
6) IDENTIFICATION: IDENTIFY WITH DART P/N "D3256-1" AND B/N USING FINE POINT PERMANENT INK MARKER
7) WEIGHT: 1.37 lbs

REV.	DESCRIPTION	BY	DATE
C	D3256-041 ELIMINATED: REMOVED (QTY.22) 0.128 HOLES FROM D3256-1F AND D3256-3 GASKET. INSTRUCTIONS TO DRILL HOLES AND INSTALL D3256-3 GASKET ARE NOW PART OF THE INSTALLATION INSTRUCTIONS	MB	07.09.28
B	D3256-3 DIM 1.30 WAS 0.65	RF	05.06.27
A	NEW ISSUE	RF	04.01.27

DESIGN		**DART AEROSPACE LTD** HAWKESBURY, ONTARIO, CANADA
DRAWN		
CHECKED		DRAWING NO. D3256 — REV. C — SHEET 1 OF 2
MFG. APPR.		
APPROVED		TITLE: ACCESS PANEL — SCALE 1:4
DE APPR.		
DATE	07.09.28	

SHOP COPY
RETURN TO
ENGINEERING
UNCONTROLLED COPY
SUBJECT TO AMENDMENT
WITHOUT NOTICE
WORK ORDER
NO. 71655

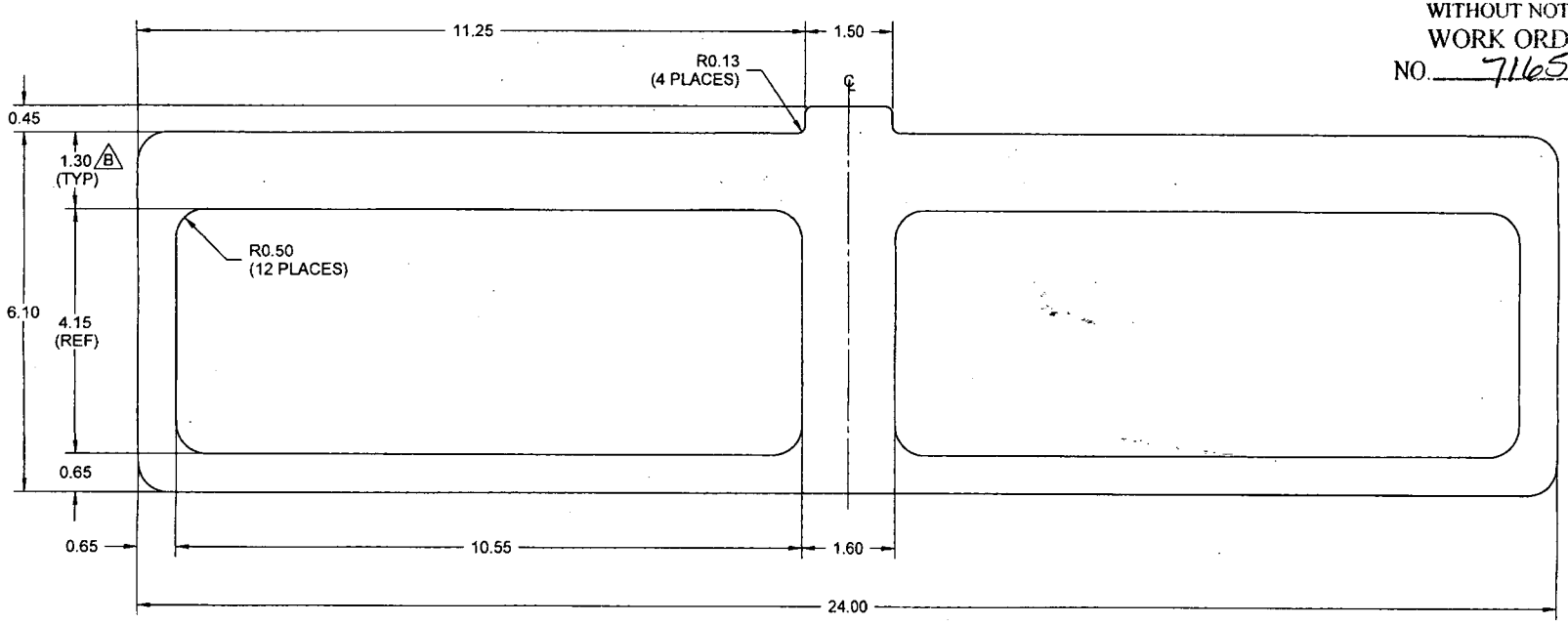

D3256-3 ACCESS PANEL

RELEASED
07.10.33

NOTES:
1) MATERIAL: DURABLA BLACK GASKET 0.035 THICK PER MIL-A-7021C OR MIL-A-17472B (CLASS 1 & 2) OR MIL-G-12803A (GRADE P-1161A)
2) FINISH: NONE
3) TOLERANCES: PER DART QSI 018 UNLESS OTHERWISE NOTED
4) UNITS: INCHES UNLESS OTHERWISE NOTED
5) BREAK SHARP EDGES: N/A
6) IDENTIFICATION: N/A
7) WEIGHT: 0.08 lbs

DESIGN		**DART AEROSPACE LTD** HAWKESBURY, ONTARIO, CANADA
DRAWN		
CHECKED	PH	DRAWING NO. D3256 — REV. C — SHEET 2 OF 2
MFG. APPR.		
APPROVED		TITLE ACCESS PANEL — SCALE 1:2
DE APPR.		
DATE	07.09.28	

DART AEROSPACE LTD	Work Order:	71655
Description: Access Panel	Part Number:	D3256-3
Inspection Dwg: D3256 **Rev:** C		Page 1 of 1

FIRST ARTICLE INSPECTION CHECKLIST

[X] First Article [ ] Prototype

Drawing Dimension	Tolerance	Actual Dimension	Accept	Reject	Method of Inspection	Comments
24.00	+/-0.030	24.00	—		RAOY	TAPE
6.10	+/-0.030	6.10	—		RAOY	TAPE
11.25	+/-0.030	11.25	—		"	
10.55	+/-0.030	10.53	—		"	
1.60	+/-0.030	1.62	—		"	
1.50	+/-0.030	1.50	—		"	
4.15	+/-0.030	4.15	—		"	
1.30	+/-0.030	1.310	—		"	
0.65	+/-0.030	.660	—		"	
0.65	+/-0.030	.66	—		"	
0.45	+/-0.030	.45	—		RAOY	TAPE

Measured by:		Audited by:		Prototype Approval:	N/A
Date:	11/08/11	Date:	11/08/12	Date:	N/A

Rev	Date	Change	Revised by	Approved
A	07.11.23	New Issue	KJ/EC/DD	